No.	Plan	Article	Qty
1	YC01472_DP	1C46704	1
2	YC00632	1C23100	1
3	XC00677	1C21200	1
4	XC00484	1C58004	1
5	XC00399	3991685	1
6	XC00355	3991313	3
7	XC00336	3990648	2
8	XC00195	3990727	1
9	XC00194	3990726	2
10	XC00193	3990725	2
11	XC00192	3990724	1
12	X005535	1911842	4
13	M5	3993323	1
14	3992019	3992019	1
15	3992014	3992014	1
16	Nut M8	3991743	3
17	3990652	3990652	1
18	3990651	3990651	1
19	Gas spring	3990633	1
20	M3 x 16	2996018	2
21	M4 x 16	2990185	2
22	Nut M3	1997899	2
23	M4 x 20	3992611	2
24	Nut M10 x 1	1903170	1
25	Nut M6	1001680	4
26	Nut M4	1001678	2
27	Washer M8	1001570	3
28	M6 x 35	1001496	4
29	Plastic cap	1001143	1

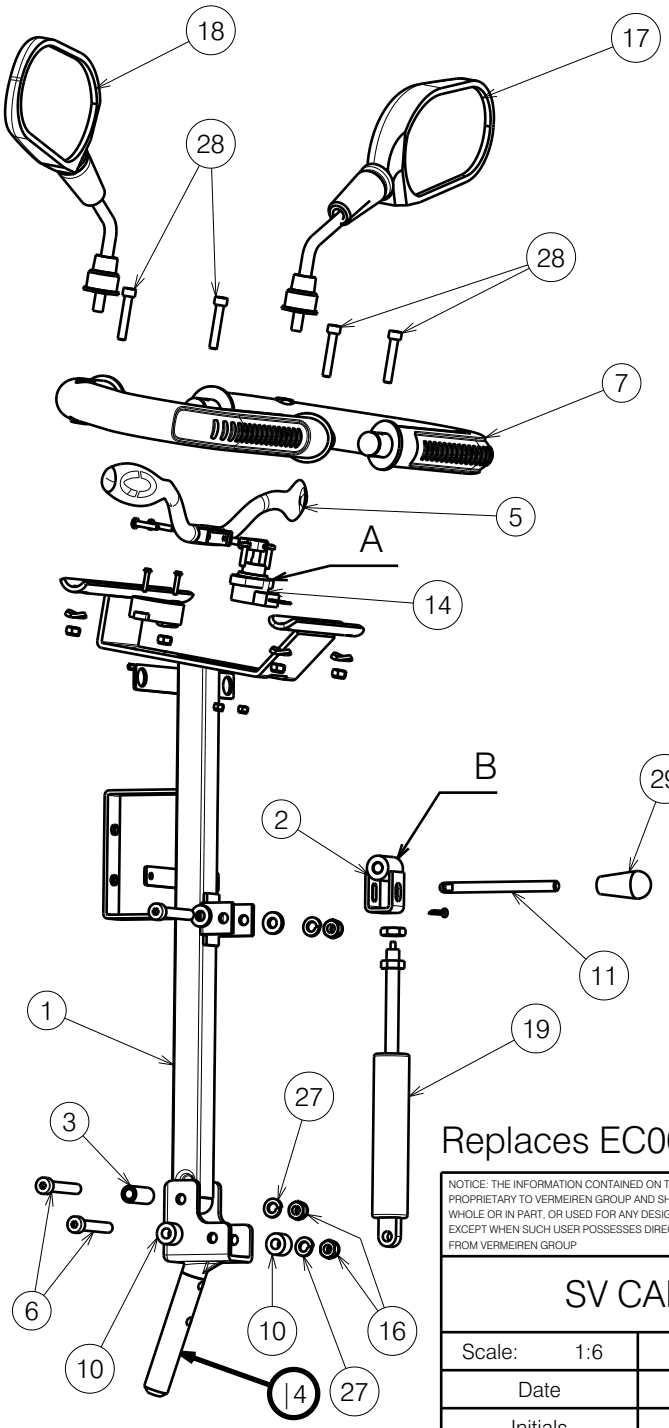

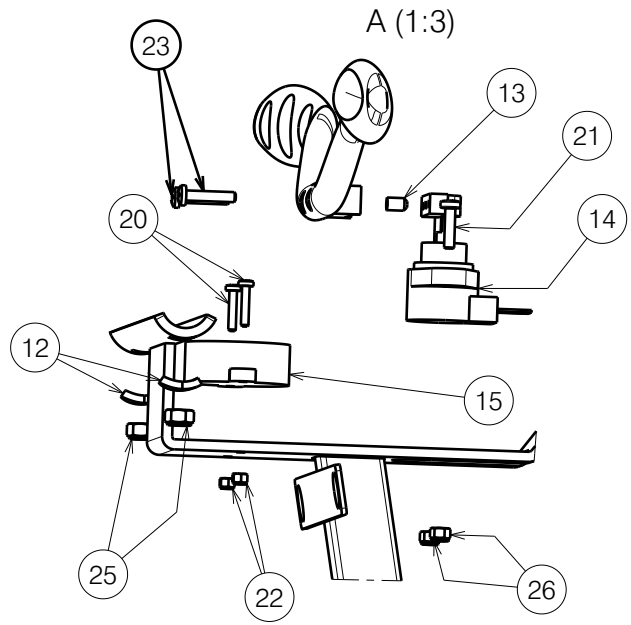

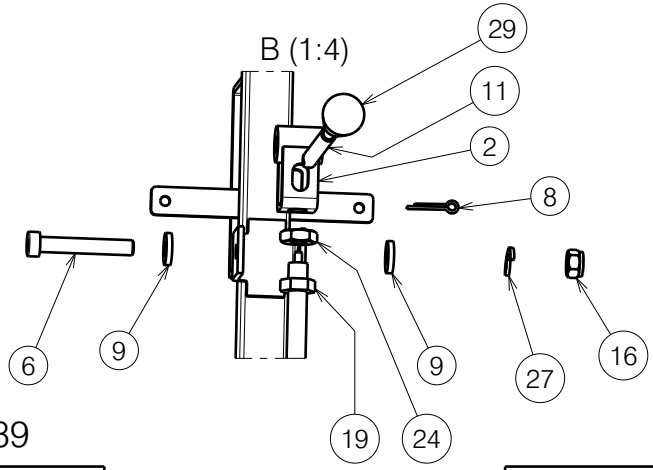

Replaces EC00139

NOTICE: THE INFORMATION CONTAINED ON THIS DRAWING IS PROPRIETARY TO VERMEIREN GROUP AND SHALL NOT BE DISCLOSED IN WHOLE OR IN PART, OR USED FOR ANY DESIGN OR MANUFACTURE, EXCEPT WHEN SUCH USER POSSESSES DIRECT WRITTEN AUTHORISATION FROM VERMEIREN GROUP

-

SV CARPO2 PL HEAD FRAME EV

Plan No.
E00078391/D

Scale: 1:6	Drafted	Verified	Confirmed
Date	22/03/2024	16/10/2026	16/10/2026
Initials	MK	PM	MK

VERMEIREN